Swansea & District Beekeepers Newsletter
Gwenynwyr Abertawe a'r Cylch

Issue No. 136 November ~ December 2020
Editor: D. Salkilld

Strange Times.

These Covid-19 days are indeed strange times for us beekeepers. However, even if we can't meet at the New Lodge for our usual activities we can still get on with the craft.

At this time of year, if you haven't already done so, you should be concentrating on over-wintering the colonies. To me, this means making sure they have sufficient stores put away, any excluders are out of the hives, mouse guards on and the varroa tray in place under mesh floors.

Let's discuss sufficient stores. A colony needs about 40lb. of honey to see it safely through the winter months and well into the following spring. Check the weight by hefting the hive, lifting it from one side, then the other side to feel its weight. The old adage is that if it feels as though it's nailed to the ground it's OK. If you can lift it easily, it needs feeding.

If you are over-wintering with more than just a brood box, it is essential that the queen excluder is removed to allow free passage of the cluster throughout the hive. Many of our members use National hives with brood and a half.

A good beekeeping friend, sadly passed away now, who kept bees for many, many years used to over-winter with the half under the brood box and strongly recommended its use. I myself have never needed to use brood and a half as I have the larger Langstroth hives which have roughly the same brood area as brood and a half, so I can't comment on how well it works. Perhaps one of our members who has used this system would like to comment for a future newsletter.

Anyway, let's hope that next year will be back to normal. Meanwhile, happy beekeeping. D. S.

A Vacuum Gadget for Catching Swarms

It was about the mid 1990s when I first heard of bees being caught by a vacuum system. The information came from one of the Leicestershire beekeepers whilst attending a Midland and South Western Convention of Beekeepers (MSWCC) conference somewhere in the Midlands. At the time the idea seemed incredulous, but they insisted that they had built a unit, caught difficult-to-reach swarms and it worked without damaging the bees. So, I wanted details.

They produced a photo which showed an ordinary petrol driven leaf blower / garden vacuum fixed onto the side panel of a nucleus box by a length of 4 inch plastic pipe. On the end panel of the nuc they had attached a flexible vacuum cleaner hose which was able to be extended to over 20 feet by use of a length of 2 inch diameter plastic plumbing pipe. Using this gadget, they told me they had successfully reached a swarm high up in a tree.

Now, a couple of important details: the leaf blower / garden vacuum was a commercial one and petrol driven so that they could collect swarms out in the countryside where there was no access to an electricity supply. They had adapted it slightly to attach the 4 inch plastic pipe. That pipe had a hole with a cover which could be slid back and forth to adjust the level of vacuum required. It was able to be uncoupled from the nuc. To stop bees being drawn into the vacuum unit, a mesh screen was built onto the side if the nuc.

One important detail was that the extract was on the side of the nuc and the inlet was on the end of the nuc. The inlet hose was a flexible vacuum cleaner hose which could be detached, and a cover put over the entry hole.

Inside the nuc was a set of frames with foundation or drawn comb, with one removed from the centre, opposite where the inlet hose was attached.

Now for the science bit. Air pressure from the inlet hose drops suddenly as it leaves the small diameter inlet hose and enters the somewhat larger nuc chamber. This follows Boyle's Law which states that as the volume of a gas increases, the pressure of that gas decreases in proportion. This reduction of pressure allows the bees to recover themselves and settle on the combs.

That Leicestershire vacuum was the first such system that I became aware of, though there are plenty of variations on the theme. The beauty of that one was that it puts bees straight into a nuc and they can live there till you are ready to hive them. The downside is that the petrol leaf blower / garden vac needs a bit of modification to adapt it for this job. A diagram is worth a hundred words, so I have put a diagram of the Leicestershire version on the following pages.

Since those days, cordless / battery operated leaf blower / garden vacs have come onto the market and these are much lighter and easier to handle, though they still need modification to attach them to a nuc.

In issue No. 21 of this newsletter, Sept. ~ Oct. 2001, I reported on a vacuum system which I had been seen on an internet site. It was about an American beekeeper named Will, who had made a vacuum system and used it to collect a feral swarm. The various postings on the site had some interesting advice.

A guy named Pete suggested that he should have the vacuum level set at 'low' or 'weak'. Also avoid getting any honey into the system as "a little honey will wet and kill a lot of bees". It sounds as though he had experience of using one. You will notice on the Leicestershire version that they had a hole cut in the tube between the nuc and the vacuum. A slider covering this hole could be moved back and forth to decrease the vacuum pressure to the required amount, which was probably found by experimentation.

I believe that some members of our Society have produced vacuum systems for catching swarms though I have never seen them. If you have made one, I should like to have a photo of it, to hear about it and how well it has worked for you. This information update could go into a future edition of the newsletter.

Diagram follows on the next page D. S.

EDITOR: Over the last couple of months I have received some interesting newspaper articles on giant Asian hornets in North America and studies of bees in urban cities in India. However, limited space means that these items will be appearing in a future newsletter.

The next newsletter is due out on 1st January 2021. Please let me have your articles / items by **20th December.** Thanks.

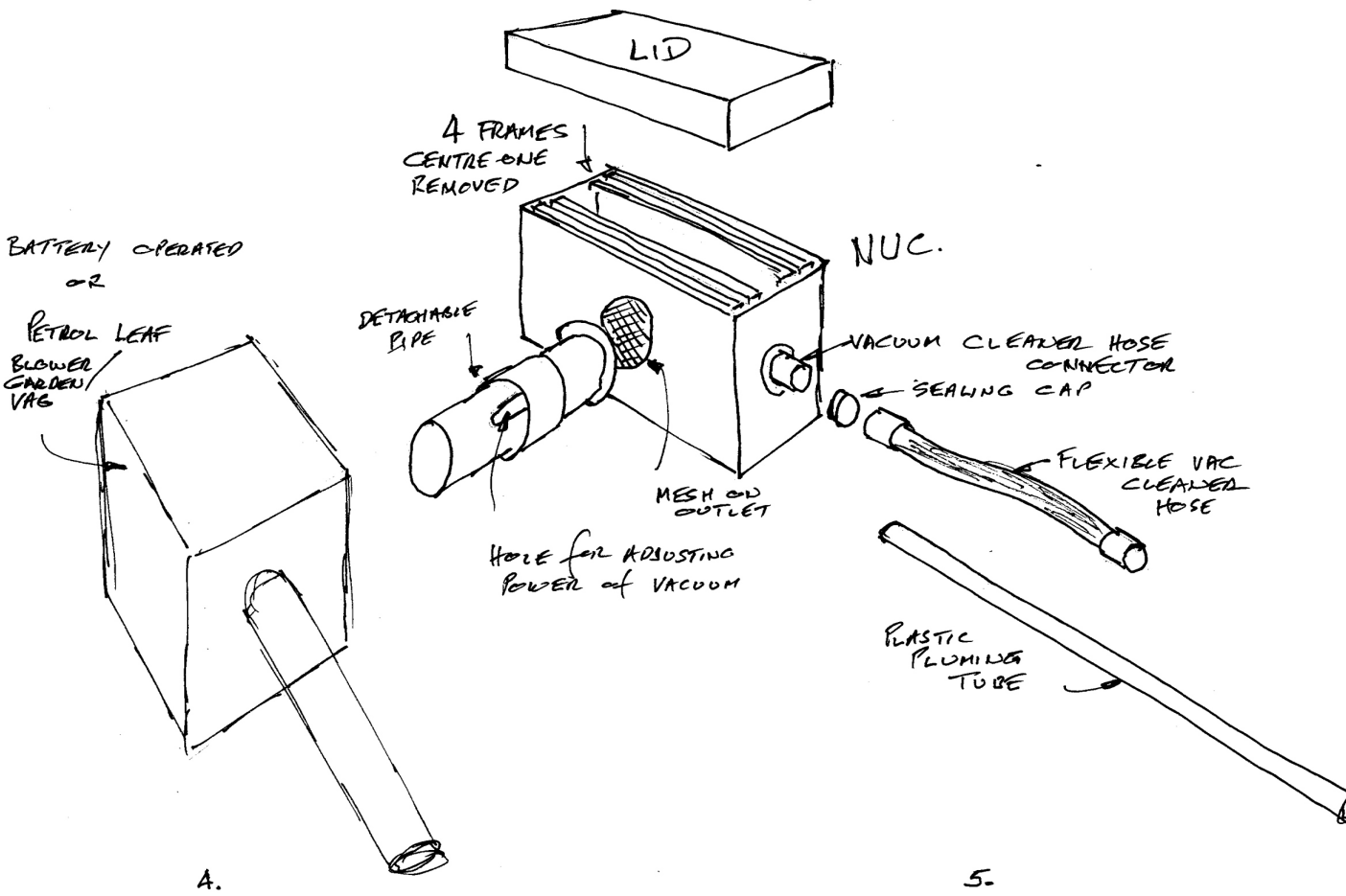

Tanging.

Tang *~ to ring; clang; sound loudly. In archaic beekeeping terms, the banging together of some metal objects to encourage a swarm to settle.*

As Jean was spell-checking the section on Ladder Safety in the last newsletter, which mentions collecting swarms from trees, she asked if I had heard of anyone tanging bees to get swarms to settle.

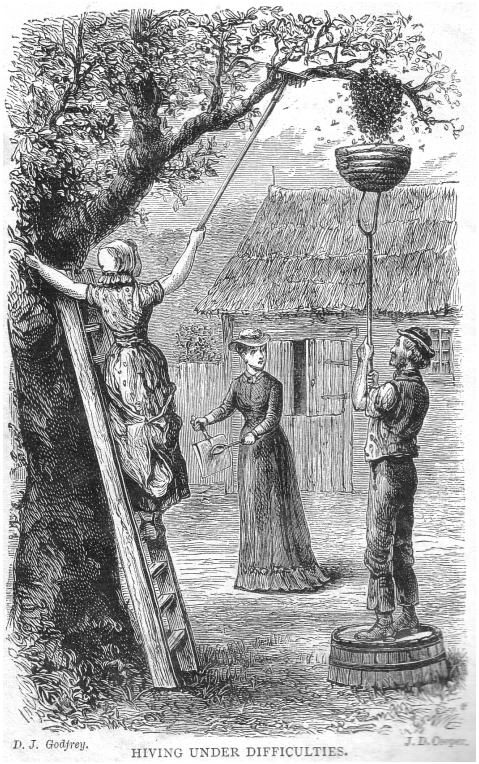

It brought to mind an old gardener we knew, who, some years ago told us that he had seen it happening. I've never tried it because I'm a bit self-conscious and would feel somewhat foolish if a neighbour saw me banging pots and pans together. But maybe they wouldn't recognise me with my veil on. Perhaps someone in the Society has seen it done, or better still, tried it. If you have, please get in touch and let me know if it was successful or not.
The lady in the centre of the picture is tanging on an old coal shovel to get the swarm to settle.

The engraving was taken from a BBKA booklet "Modern Beekeeping" published in 1886 and is rather tongue-in cheek because the booklet is all about improving beekeeping by getting people to move away from skeps to 'modern' wooden beehives and, in one section, even shows an extractor. One thing to note in this picture is the lack of protective equipment. At that time the native bees must have been very placid.

D. S.

"When Bees Were Bees" by Tom Davies

Beekeeping these days faces a good many problems, but years ago a Mr. E. B. Norwood, of Tornillo, Texas, who kept nearly thirty hives of bees for queen rearing, faced a few.

This was in the late 1920s, the area where he kept his bees was in the very hot and dry south-west of Texas. Agriculture and beekeeping were only possible because irrigation canals had been provided in the area, allowing crops of cotton, alfalfa and sweet clover to be grown.

To raise queens, Mr. Norwood used a hive brood chamber split into three parts, with three combs to each of the nuclei, with two entrances at the rear, and one to the front. Each of these had a comb of brood, one of honey, and one empty comb.

The nuclei were filled up with bees and kept in a cool place until the next morning, each given a ripe queen cell before being released.

Mr. Norwood's efforts to found a profitable beekeeping business in that area were described in an article sent in to "Gleanings in Bee Culture" and were the result of a Mr. K. A. Gallant of El Paso, Texas. The article was titled "Beekeeping along the Rio Grand", and published in January 1930.

It is quite a long article and will take more space for me to describe it, but to finish for this issue, Mr. Norwood kept 30 colonies at first, to supply bees and combs for his nuclei. As time went on he bought some colonies to increase his stocks, but had quite a set back which I will describe next time.

Till then, Tom.

"More About Bees" by Tom Davies

That lovely spell of weather before storm Alex came in to spoil things allowed me to do most of the tidying up, like clearing runner bean bines, and making a good start on the autumn digging.

My bee garden attracted all kinds of fliers, being busy from morning till late evening. With plenty of dahlias, agastaches, dwarf French marigolds, and of course, Michaelmas daisies, they were exceptional this year. The only flower that was not as I expected were the rudbeckias, they only attracted the odd butterfly, so next year I will try another flower in their place.

Just had a very unusual lunch, beans on toast, I hear you asking what is so special about that! Well, I made my own bread for the toast, and it is very nice, I started making bread a couple of months ago and while I admit that for the first few times, my efforts at making round loaves looked like the dough had been thrown out of an upstairs window! But I have improved a bit, so I'll carry on doing it.

The blackberries have been good this year and, if this weather will improve a bit, there are still a few to come. I have enjoyed them so far and have some in the freezer for future use.

Winter appears to be coming in fast, so I hope that your bees come through it safely.

Till the next time – Tom

Contact Numbers

Chairman:	**Paul Lyons**	**sd_bks@btinternet.com**
Secretary:	**Contact**	**sdbks.secretary@gmail.com**
Treasurer:	**John Gale**	**07855 451 781**